Twiflex Limited

DS2000

MR Disc Brake Caliper

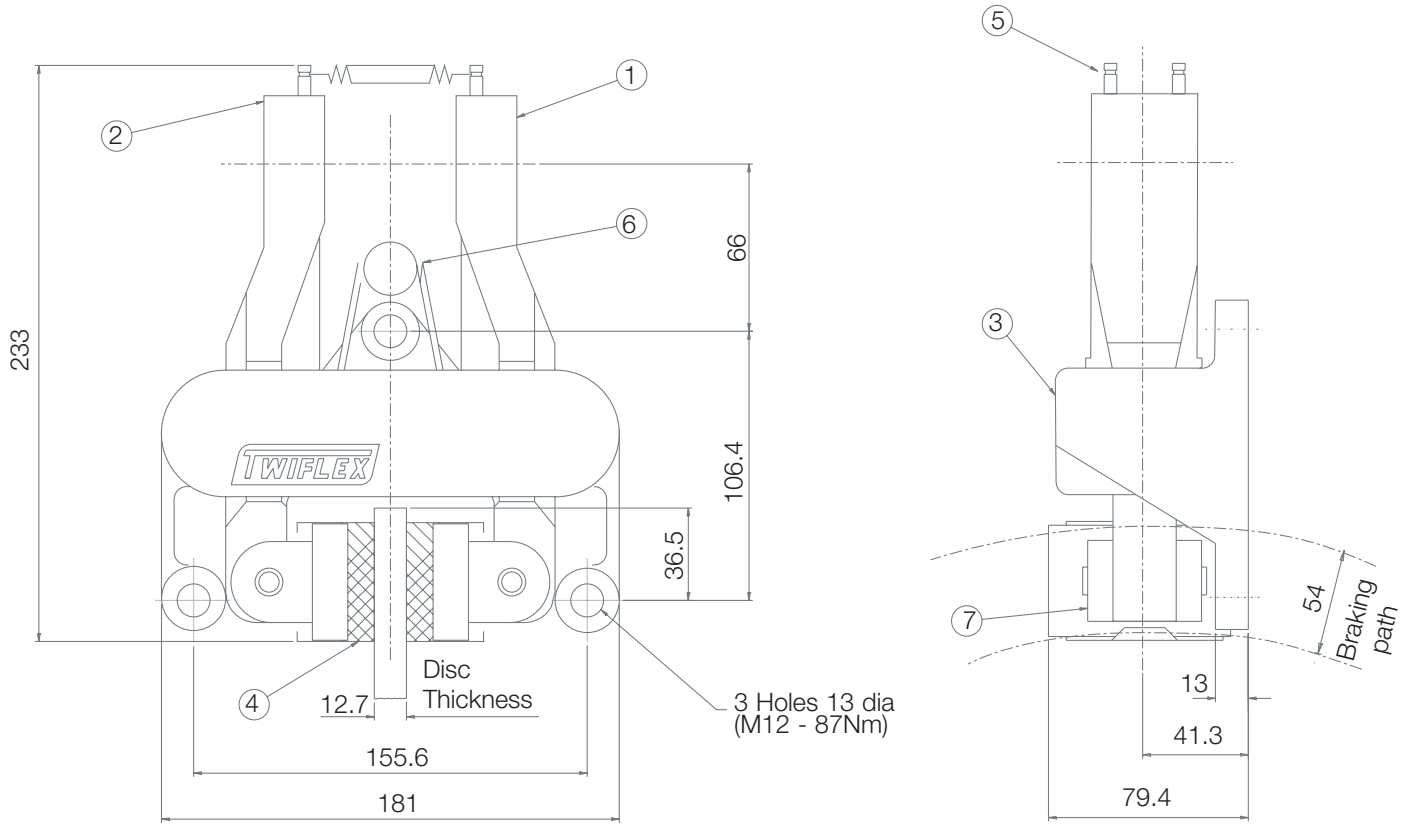

Disc Brake Caliper Part Number 6780413

Weight	6.5 kg
Pad wear allowance	8mm
Total pad area	58cm^2 (2 Pads)
Pad dimensions new	63.5 x 46 x 12.7mm thick
Pad material	Asbestos-free high friction material

The standard MR series brake caliper is supplied as a right-hand assembly (as shown above).
Left-hand assembly can be supplied on request or can easily be changed on site. A marine version is available.

AVAILABLE SPARES

Item	Component	Part No.	QTY
1	Arm Assembly - Thruster side	6600112	1
2	Arm Assembly - Opposite Side	6600113	1
3	Caliper Base	8030010	1
4	Pad Assembly (1 pad)	0780123-Z	2
5	Tension Spring	2400035	2
6	Torsion Spring	2500020	1
7	Pad Spring	7900024	2
	Spring Kit (items 5 and 6)	7902811	1

Twiflex Disc Brakes must be used with Twiflex asbestos free brake pads. The use of any other brake pads will invalidate the warranty. Twiflex Limted reserves the right to modify or change the design without prior notice.

MR Disc Brake Caliper

General Description

The MR disc brake calipers should be used with a brake disc of 12.7mm thick.
They may be used with any of the series of actuators listed below. Normally one or two units will be used per disc but the number may be increased, depending on disc size and brake torque required.

Thruster	Description	Data Sheet	Maximum Braking Force kN
A	Pneumatically applied - Spring released	2001	6.9
B	Pneumatically applied - Spring released	2002	10.8
D	Pneumatically applied - Spring released	2003	3.6
E	Pneumatically applied - Spring released	2004	0.74
G	Pneumatically applied - Spring released	2005	1.9
H	Mechanically applied - Lever operated	2006	8.4
K	Spring applied - Pneumatically released	2007	2.2, 4.3 and 6.4
L	Spring applied - Hydraulically released	2008	2.2, 4.3 and 6.4
W	Mechanically applied - Hand operated	2009	2.68

Mounting:

MR brake calipers can be mounted at any angle around the periphery of the disc, but ideally they should be horizontal in the 3 and 9 o'clock position on the disc to prevent bias due to the weight of the thruster. Inclined mounting kits are available.

Discs:

A range of standard discs of 12.7mm thick are available from Twiflex see Data Sheet DS0501. Minimum Disc Diameter for the MR caliper is 250mm

Controllers:

Standard Twiflex Controllers are available for single or multi-caliper installations for use with electric, pneumatic and hydraulic signalling systems.

Pad Replacement:

To replace the pads, secure the installation to ensure safety. Ease out the pad springs and remove worn pads. Clean the disc and pad mounts with a suitable cleaning agent such as white spirit. Fit new pads. Replace pad springs.

For bedding-in and conditioning procedures see Publication M1060

Health and Safety data sheet reference to DS0500

Twiflex® Limited
An Altra Industrial Motion Company

www.twiflex.com
9 Briar Road, Twickenham
Middlesex TW2 6RB - England
+44 (0) 20 8894 1161
Fax: +44 (0) 20 8755 5601

This approval is in Accordance with
Certificate number 850822
Issue 04 June 2009 © Twiflex 2001.

Twiflex Limited

DS2001

MRA Disc Brake Caliper - Pneumatically Applied, Spring Released

Nominal dimensions given

For caliper dimensions see DS2000

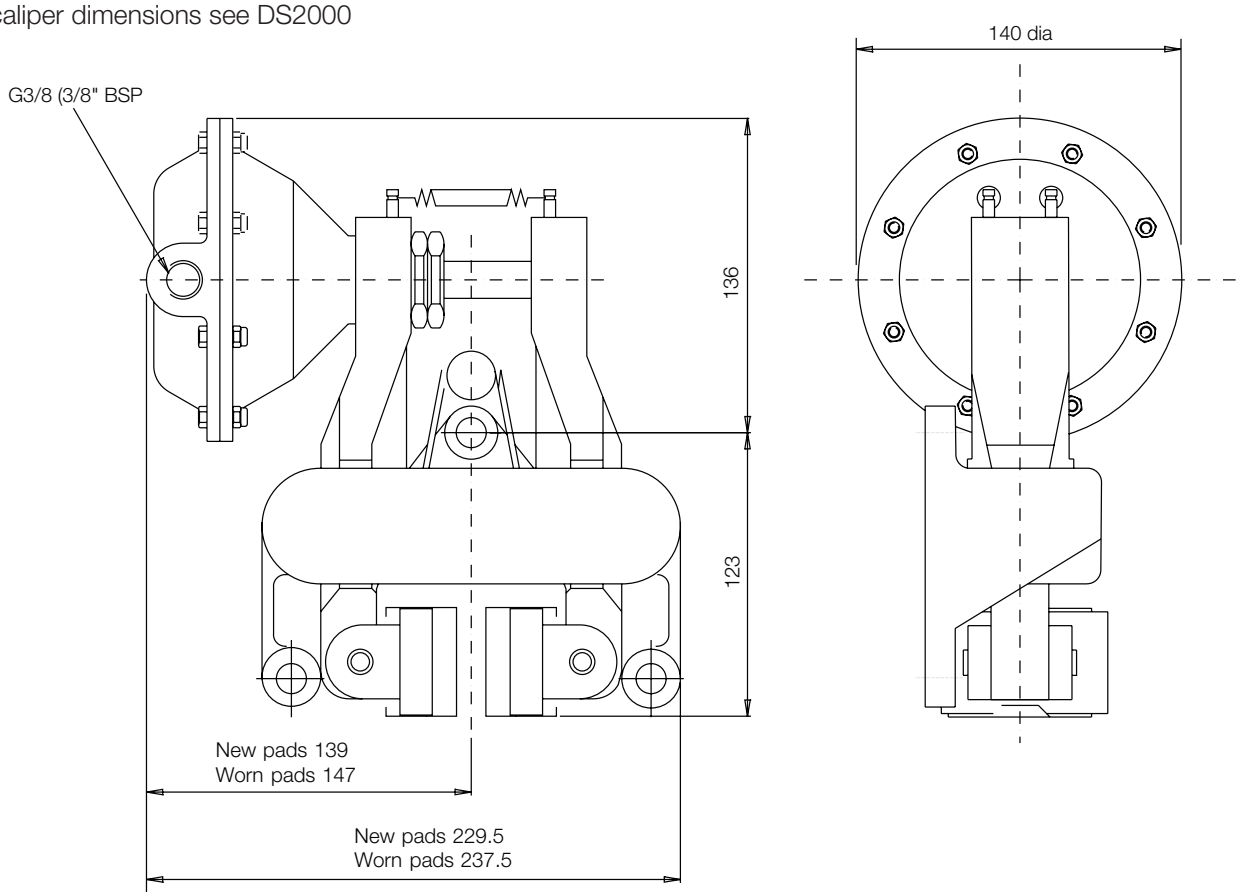

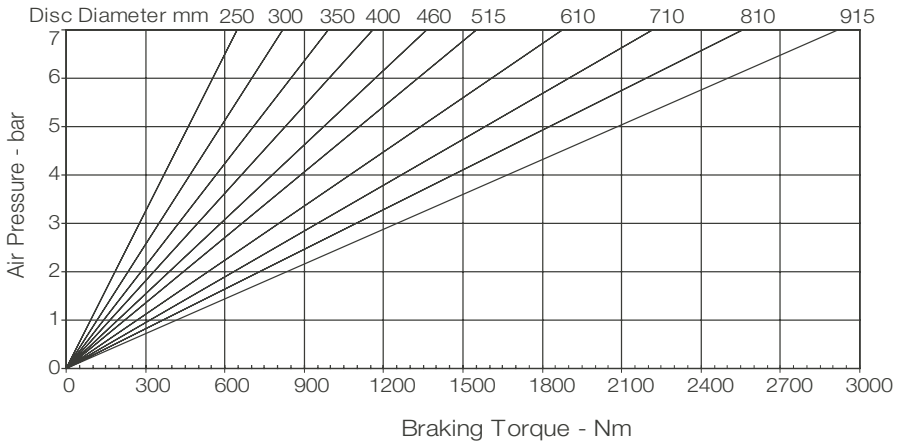

Weight (caliper and thruster) - 7.82kg
(thruster only) - 1.32kg

Volume displacement of thruster at full stroke is 300ml.

Maximum Pressure 7 bar

Maximum Braking Force = 6.9kN @ 7 bar

The ratings shown on the above graph are based on fully bedded and conditioned brake pads with nominal friction coefficient μ=0.4.

For bedding-in and conditioning procedures see Publication M1060.

Braking Force is defined as the Tangential Force acting on the brake disc at the Effective Disc Radius.
Braking Torque (Nm) = Braking Force (N) x Effective Disc Radius (m) where Effective Disc Radius = Actual Disc Radius - 0.03

Twiflex Disc Brakes must be used with Twiflex asbestos free brake pads. The use of any other brake pads will invalidate the warranty. Twiflex Limted reserves the right to modify or change the design without prior notice.

MRA Disc Brake Caliper - Pneumatically Applied, Spring Released

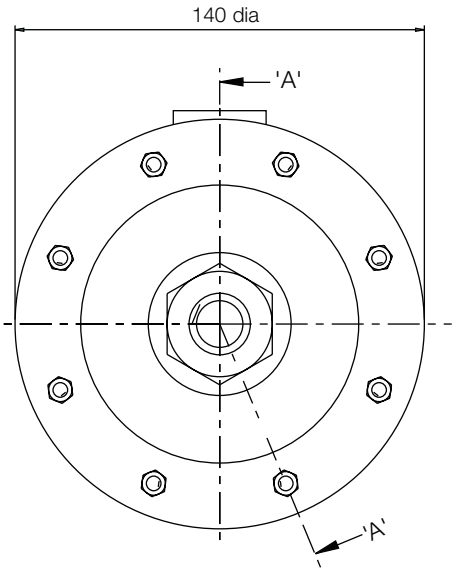

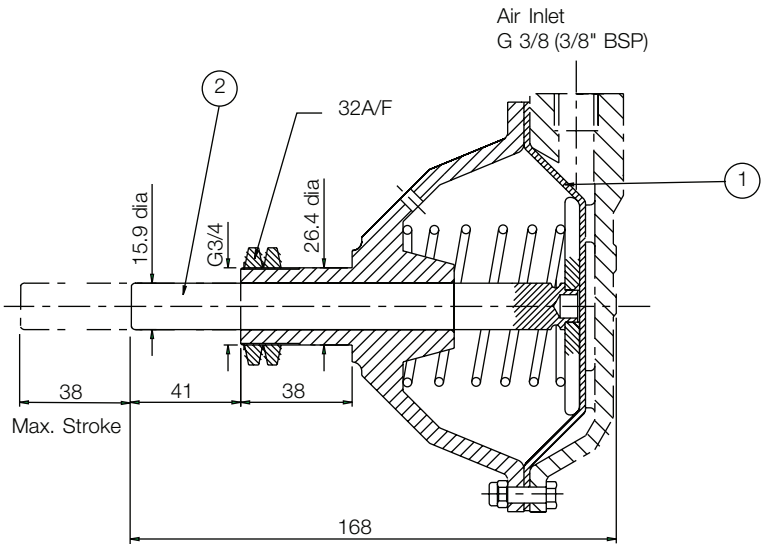

Section 'A' - 'A'

This range of pneumatically operated brakes uses dry and filtered compressed air at pressures up to 7 bar. Pneumatic brakes require a control valve which may be operated either manually, or by pneumatic or electric signal.

Should it become necessary to replace a diaphragm, ensure air supply is disconnected, remove the M5 bolts and the rear cap of the thruster. Remove the worn diaphragm; clean-up the contacting surfaces and re-assemble with the new diaphragm and bolts in position (Tightening Torque 5.7Nm).

Thruster Part Number 7200056

Available Spares		
Item	**Component**	**Part No.**
1	Diaphragm Kit	7902801
2	Piston Rod Assembly	7200493

Thruster Fitment

1. Offer thruster to caliper making sure that both lock nuts are removed before placing push rod through caliper arm.
2. Fit lock nuts over the push rod and locate it's end within the slot of the other arm.
3. Tighten one lock nut to 50-60 Nm then tighten the second nut against the first.

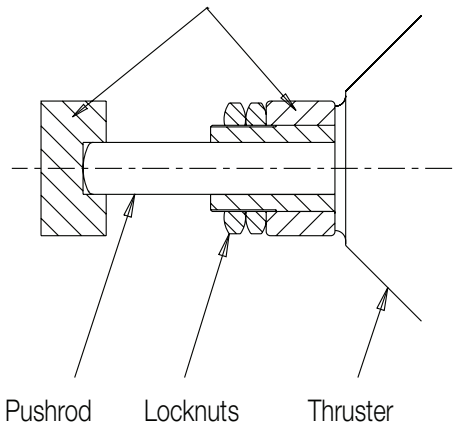

Twiflex® Limited
An Altra Industrial Motion Company

www.twiflex.com

9 Briar Road, Twickenham
Middlesex TW2 6RB - England
+44 (0) 20 8894 1161
Fax: +44 (0) 20 8755 5601

This approval is in Accordance with Certificate number 850822 Issue 04 June 2009 © Twiflex 2001.

Twiflex Limited

DS2002

MRB Disc Brake Caliper - Pneumatically Applied, Spring Released

Nominal dimensions given

For caliper dimensions see DS2000

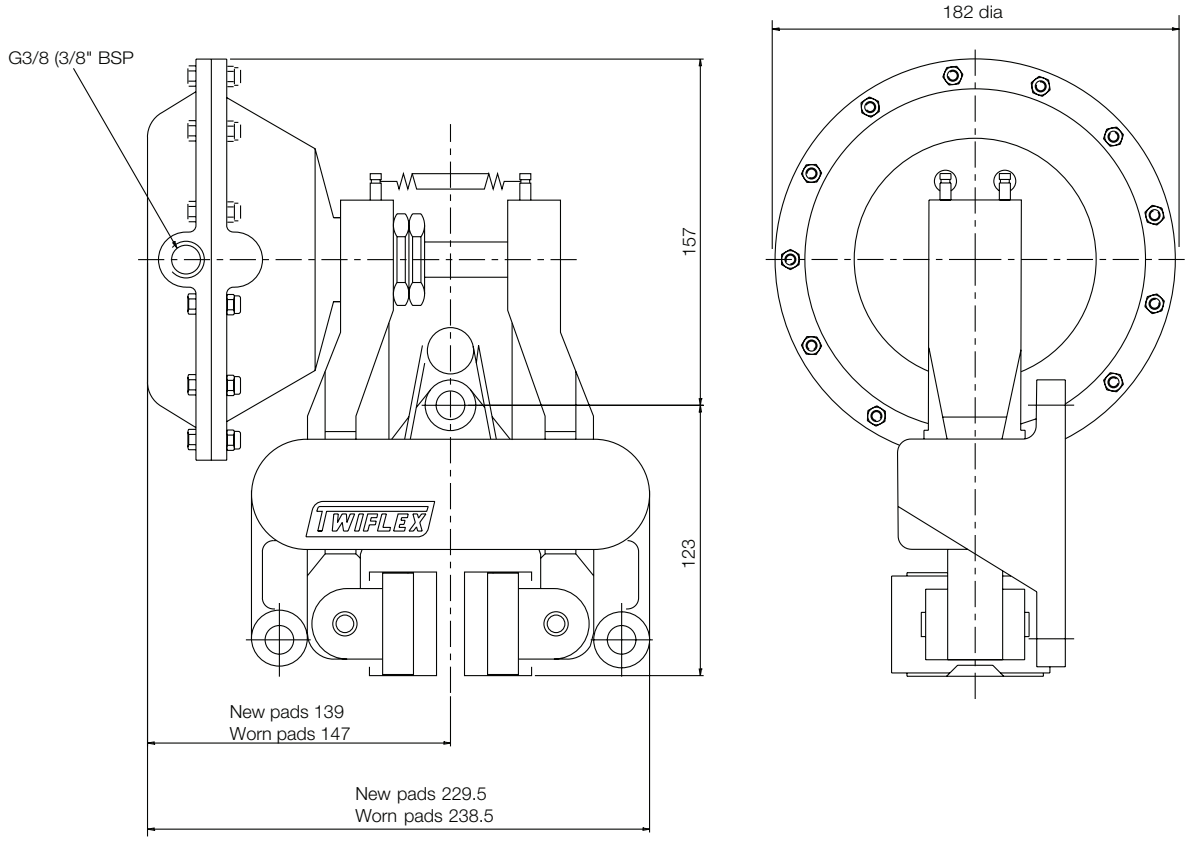

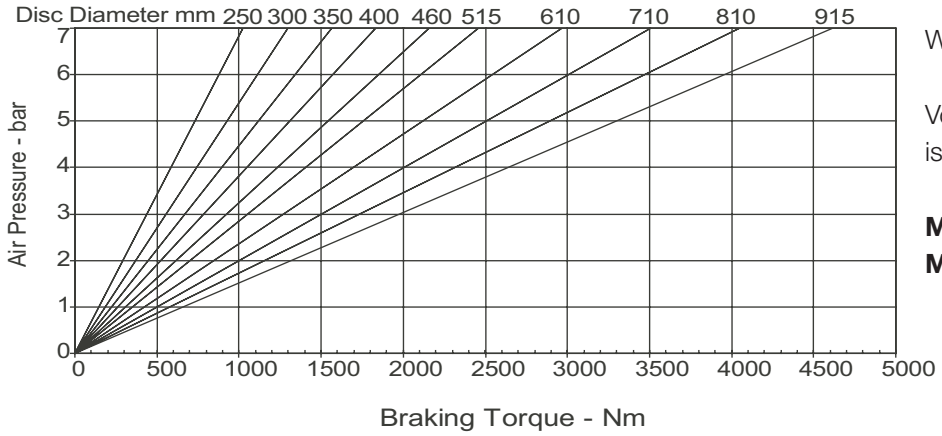

Weight (caliper and thruster) - 8.56kg
(thruster only) - 2.06kg

Volume displacement of thruster at full stroke is 426ml.

Maximum Pressure 7 bar

Maximum Braking Force = 10.8kN @ 7 bar

The ratings shown on the above graph are based on fully bedded and conditioned brake pads with nominal friction coefficient μ=0.4.

For bedding-in and conditioning procedures see Publication M1060.

Braking Force is defined as the Tangential Force acting on the brake disc at the Effective Disc Radius.
Braking Torque (Nm) = Braking Force (N) x Effective Disc Radius (m) where Effective Disc Radius = Actual Disc Radius - 0.03

Twiflex Disc Brakes must be used with Twiflex asbestos free brake pads. The use of any other brake pads will invalidate the warranty. Twiflex Limted reserves the right to modify or change the design without prior notice.

MRB Disc Brake Caliper - Pneumatically Applied, Spring Released

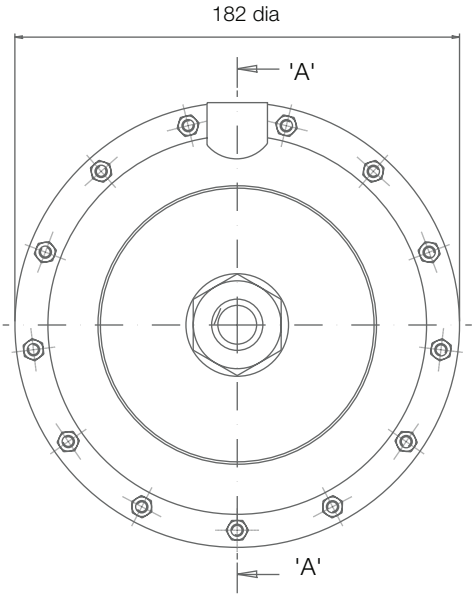

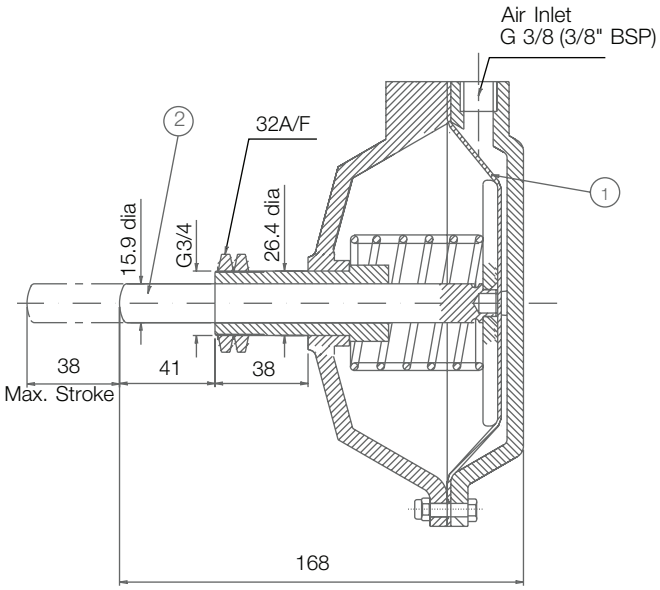

Section 'A' - 'A'

This range of pneumatically operated brakes uses dry and filtered compressed air at pressures up to 7 bar. Pneumatic brakes require a control valve which may be operated either manually, or by pneumatic or electric signal.

Should it become necessary to replace a diaphragm, ensure air supply is disconnected, remove the M5 bolts and the rear cap of the thruster. Remove the worn diaphragm; clean-up the contacting surfaces and re-assemble with the new diaphragm and bolts in position (Tightening Torque 5.7Nm).

Thruster Part Number 7200829

Available Spares		
Item	**Component**	**Part No.**
1	Diaphragm Kit	7902803
2	Piston Rod Assembly	7200803

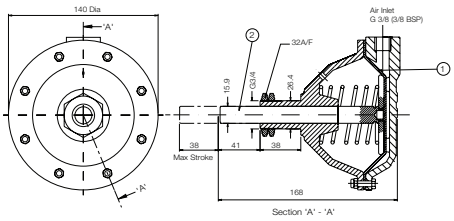

Section 'A' - 'A'

Thruster Fitment

1. Offer thruster to caliper making sure that both lock nuts are removed before placing push rod through caliper arm.

2. Fit lock nuts over the push rod and locate it's end within the slot of the other arm.

3. Tighten one lock nut to 50-60 Nm then tighten the second nut against the first.

Twiflex® Limited
An Altra Industrial Motion Company

www.twiflex.com

9 Briar Road, Twickenham
Middlesex TW2 6RB - England
+44 (0) 20 8894 1161
Fax: +44 (0) 20 8755 5601

This approval is in Accordance with Certificate number 850822
Issue 04 June 2009 © Twiflex 2001.

DS2002 11/11 Printed in USA

Twiflex Limited

DS2003

MRD Disc Brake Caliper - Pneumatically Applied, Spring Released

Nominal dimensions are given

For caliper dimensions see DS2000

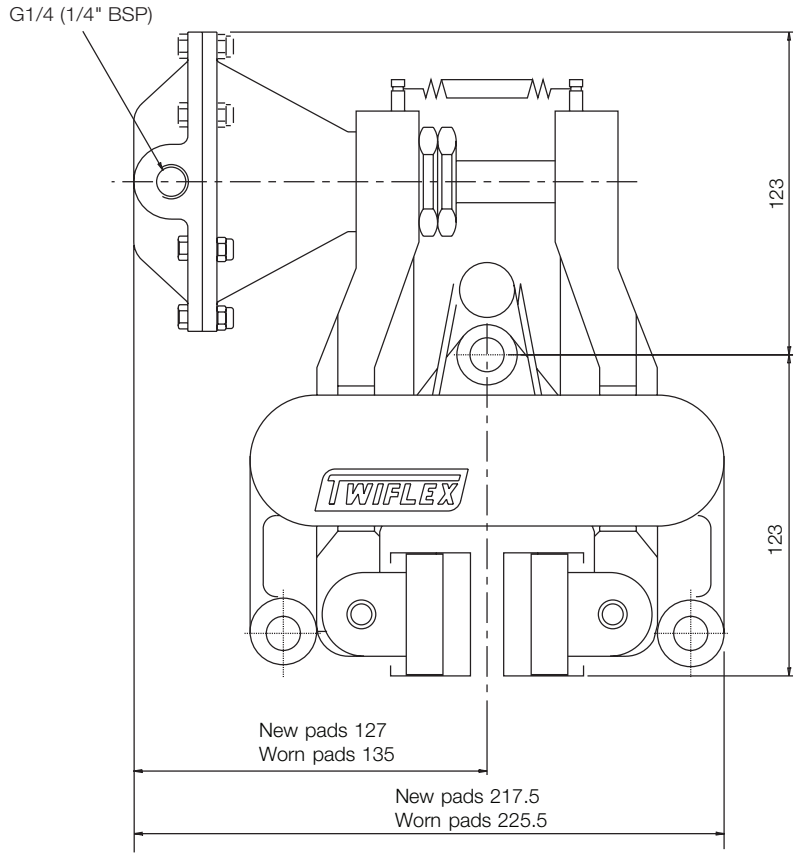

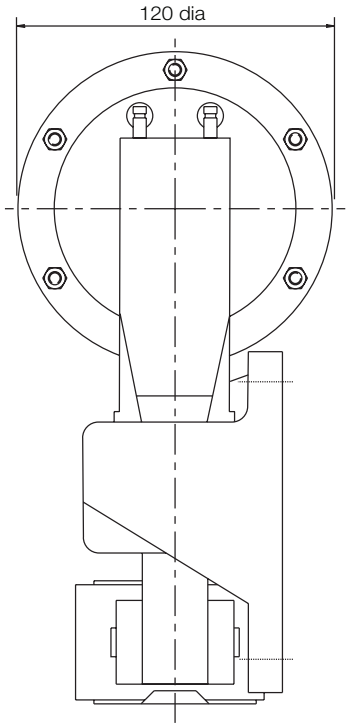

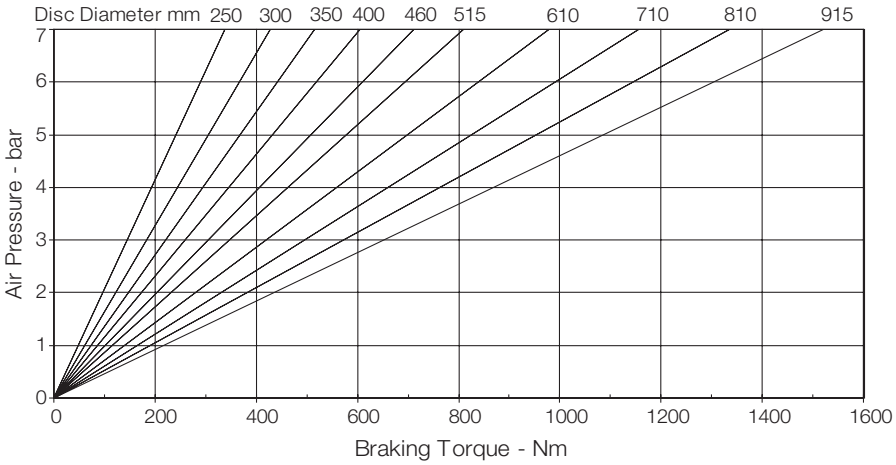

Weight (caliper and thruster) - 7.65kg
(thruster only) - 1.15kg

Volume displacement of thruster at full stroke is 150ml.

Maximum pressure 7 bar

Maximum Braking Force - 3.6kN @7bar

The ratings shown on the above graph are based on fully bedded and conditioned brake pads with nominal friction coefficient μ=0.4.

For bedding-in and conditioning procedures see Publication M1060.

Braking Force is defined as the Tangential Force acting on the brake disc at the Effective Disc Radius.

Braking Torque (Nm) = Braking Force (N) x Effective Disc Radius (m) where Effective Disc Radius = Actual Disc Radius - 0.03.

Twiflex Disc Brakes must be used with Twiflex asbestos free brake pads. The use of any other brake pads will invalidate the warranty. Twiflex Limted reserves the right to modify or change the design without prior notice.

MRD Disc Brake Caliper - Pneumatically Applied, Spring Released

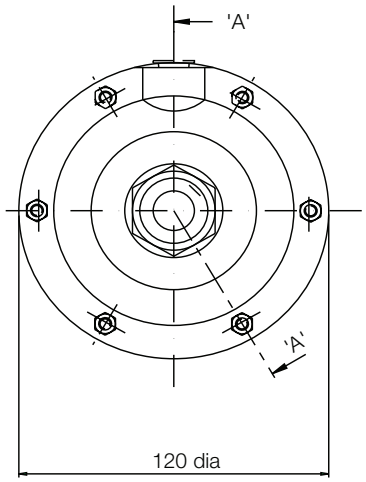

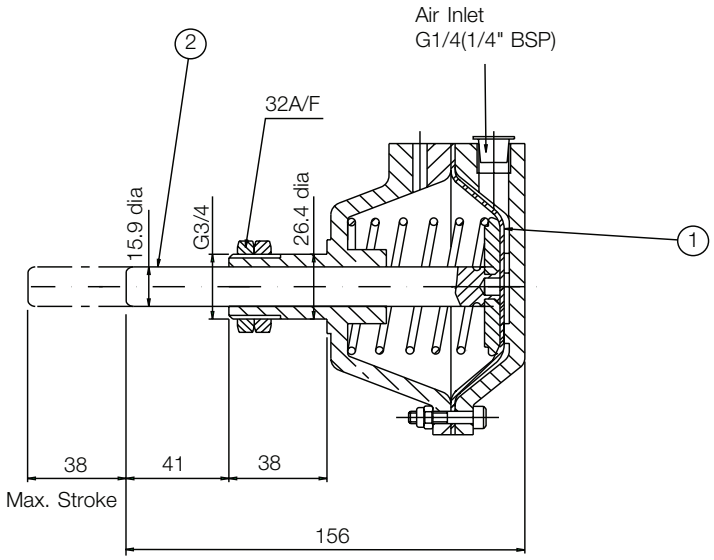

Section 'A' - 'A'

This range of pneumatically operated brakes uses dry and filtered compressed air at pressures up ot 7 bar. Pneumatic brakes require a control valve which may be operated either manually, or by pneumatic or electrical signal.

Should it become necessary to replace a diaphragm, ensure air supply is disconnected, remove the M5 botls and the rear cap of the thruster. Remove the worn diaphragm; clean-up the contacting surfaces and re-assemble with the new diaphragm and botls in position. (Tightening Torque 5.7Nm)

Thruster Part Number 7200863

Available Spares		
Item	**Component**	**Part No.**
1	Diaphragm Kit	7902799
2	Piston Rod Assembly	7200802

Thruster Fitment

1. Offer thruster to caliper making sure that both lock nuts are removed before placing push rod through caliper arm.

2. Fit lock nuts over the push rod and locate it's end within the slot of the other arm.

3. Tighten one lock nut to 50-60 Nm then tighten the second nut against the first.

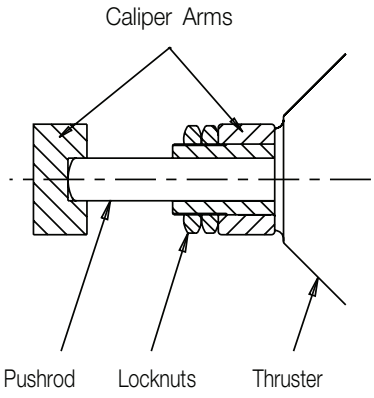

Twiflex® Limited
An Altra Industrial Motion Company

www.twiflex.com

9 Briar Road, Twickenham
Middlesex TW2 6RB - England
+44 (0) 20 8894 1161
Fax: +44 (0) 20 8755 5601

This approval is in Accordance with Certificate number 850822
Issue 04 June 2009 © Twiflex 2001.

Twiflex Limited

DS2004

MRE Disc Brake Caliper - Pneumatically Applied, Spring Released

Nominal dimensions are given

For caliper dimensions see DS2000

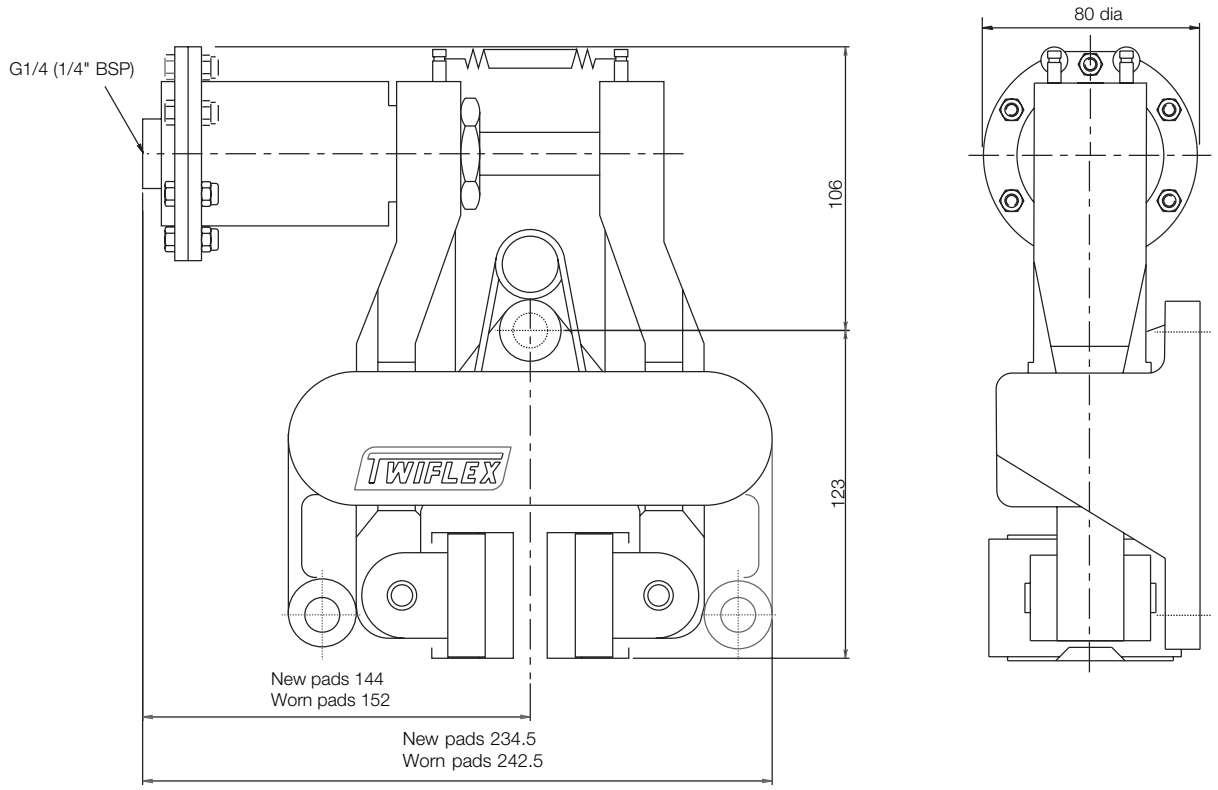

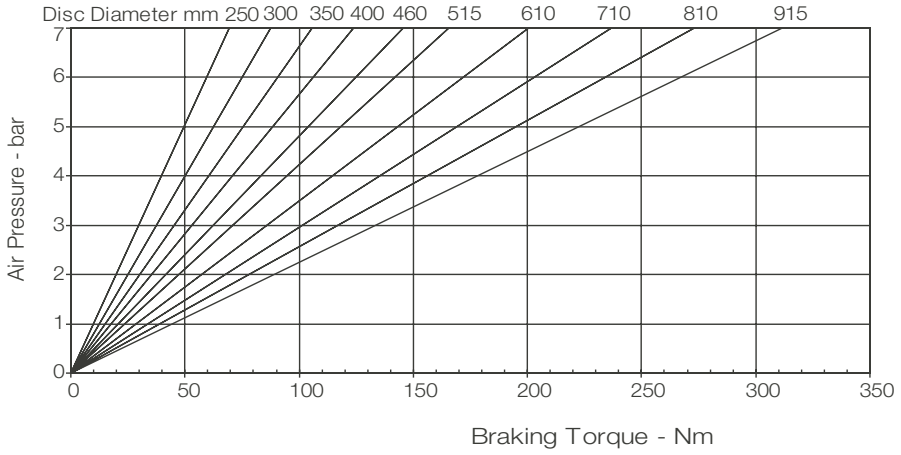

Weight (caliper and thruster) - 6.84kg
(thruster only) - 0.34kg

Volume displacement of thruster at full stroke is 25ml.

Maximum pressure 7 bar

Maximum Braking Force - 0.74kN @7bar

The ratings shown on the above graph are based on fully bedded and conditioned brake pads with nominal friction coefficient μ=0.4.

For bedding-in and conditioning procedures see Publication M1060.

Braking Force is defined as the Tangential Force acting on the brake disc at the Effective Disc Radius.

Braking Torque (Nm) = Braking Force (N) x Effective Disc Radius (m) where Effective Disc Radius = Actual Disc Radius - 0.03.

Twiflex Disc Brakes must be used with Twiflex asbestos free brake pads. The use of any other brake pads will invalidate the warranty. Twiflex Limted reserves the right to modify or change the design without prior notice.

MRE Disc Brake Caliper - Pneumatically Applied, Spring Released

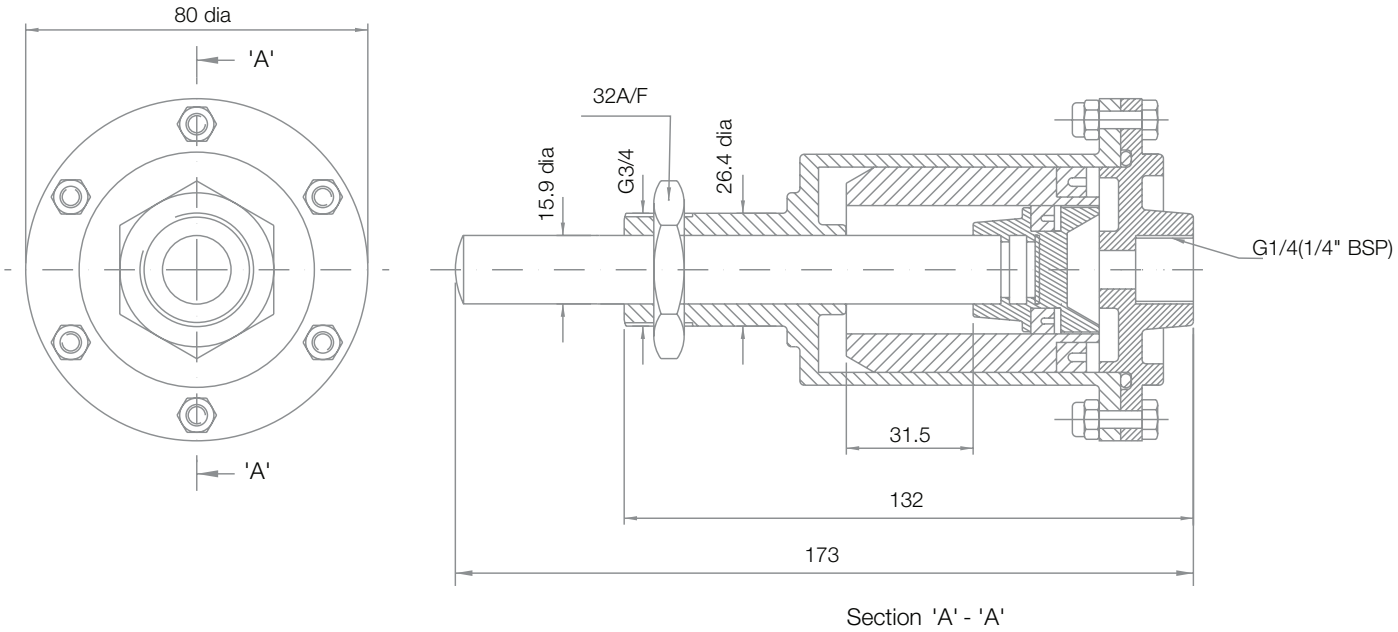

Thruster Part Number 7200478

This range of pneumatically operated brakes uses dry and filtered compressed air at pressures up ot 7 bar. Pneumatic brakes require a control valve which may be operated either manually, or by pneumatic or electrical signal.

Thruster Fitment

1. Offer thruster to caliper making sure that both lock nuts are removed before placing push rod through caliper arm.

2. Fit lock nuts over the push rod and locate it's end within the slot of the other arm.

3. Tighten one lock nut to 50-60 Nm.

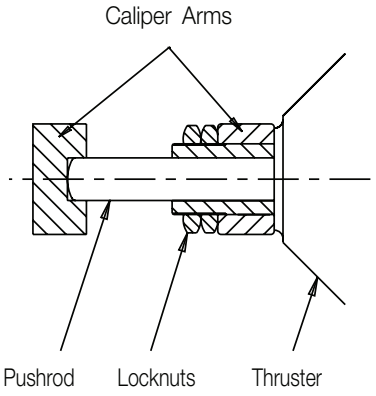

Twiflex® Limited
An Altra Industrial Motion Company

www.twiflex.com

9 Briar Road, Twickenham
Middlesex TW2 6RB - England
+44 (0) 20 8894 1161
Fax: +44 (0) 20 8755 5601

This approval is in Accordance with Certificate number 850822
Issue 04 June 2009 © Twiflex 2001.

Twiflex Limited

DS2005

MRG Disc Brake Caliper - Pneumatically Applied, Spring Released

Nominal dimensions are given

For caliper dimensions see DS2000

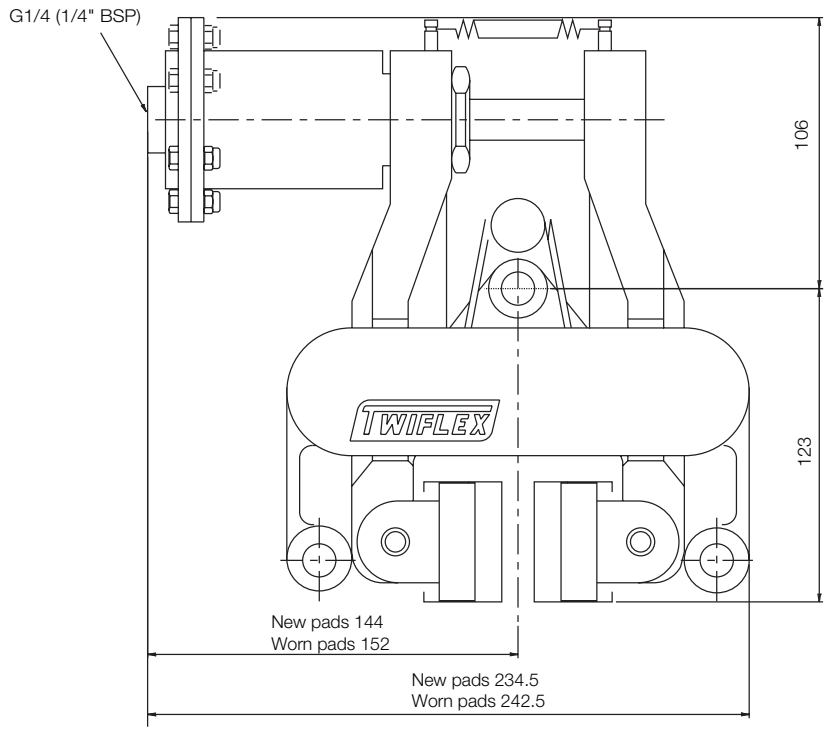

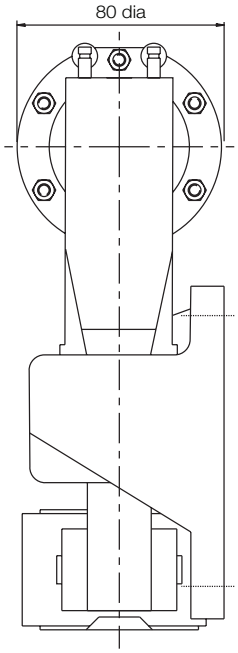

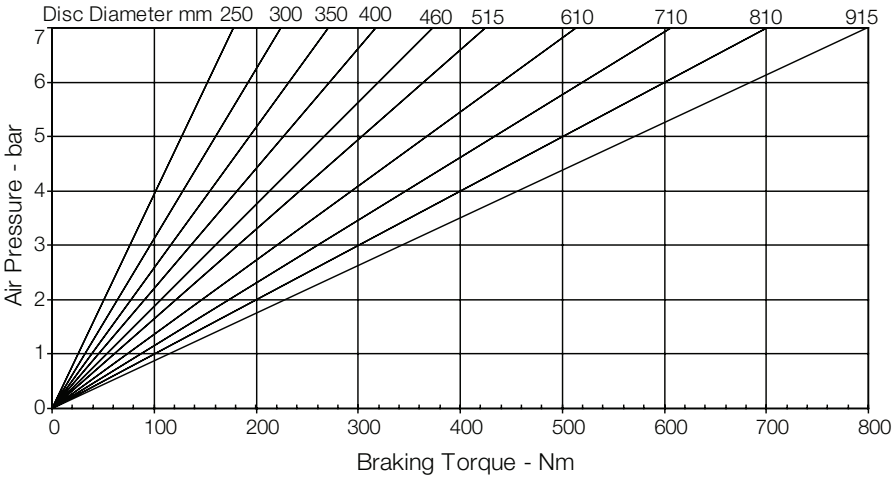

Weight (caliper and thruster) - 6.8kg
(thruster only) - 0.3kg

Volume displacement of thruster at full stroke is 64ml.

Maximum pressure 7 bar

Maximum Braking Force - 1.9kN @ 7bar

The ratings shown on the above graph are based on fully bedded and conditioned brake pads with nominal friction coefficient μ=0.4.

For bedding-in and conditioning procedures see Publication M1060.

Braking Force is defined as the Tangential Force acting on the brake disc at the Effective Disc Radius.

Braking Torque (Nm) = Braking Force (N) x Effective Disc Radius (m) where Effective Disc Radius = Actual Disc Radius - 0.03.

Twiflex Disc Brakes must be used with Twiflex asbestos free brake pads. The use of any other brake pads will invalidate the warranty. Twiflex Limted reserves the right to modify or change the design without prior notice.

MRG Disc Brake Caliper - Pneumatically Applied, Spring Released

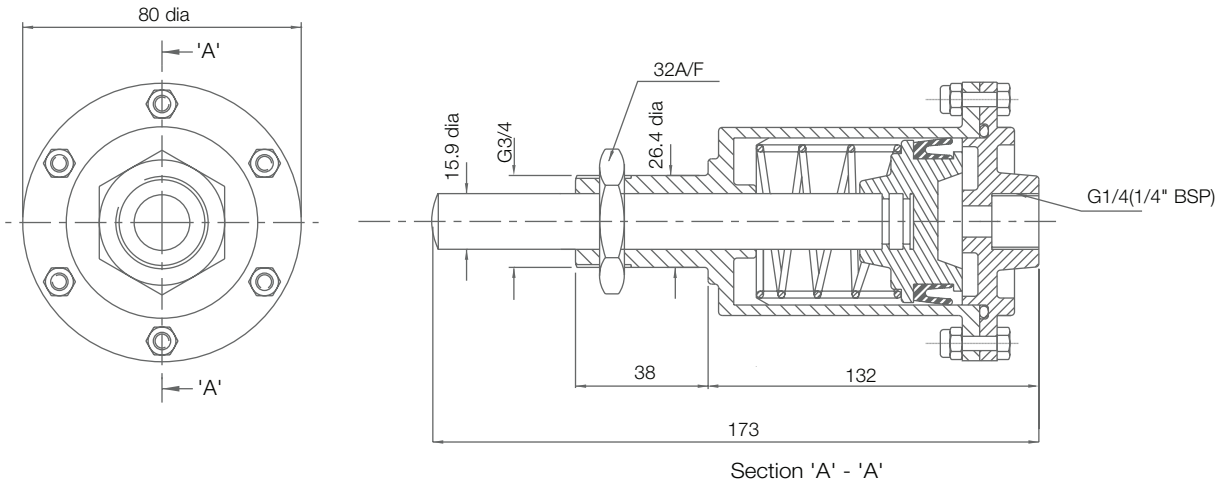

Thruster Part Number 7200434

This range of pneumatically operated brakes uses dry and filtered compressed air at pressures up to 7 bar. Pneumatic brakes require a control valve which may be operated either manually, or by pneumatic or electrical signal.

Thruster Fitment

1. Offer thruster to caliper making sure that the lock nut is removed before placing push rod through caliper arm.

2. Fit lock nut over the push rod and locate it's end within the slot of the other arm.

3. Tighten the lock nut against the arm to 50-60 Nm.

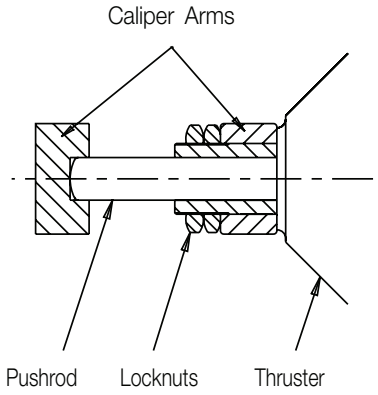

Twiflex® Limited
An Altra Industrial Motion Company

www.twiflex.com

9 Briar Road, Twickenham
Middlesex TW2 6RB - England
+44 (0) 20 8894 1161
Fax: +44 (0) 20 8755 5601

This approval is in Accordance with Certificate number 850822
Issue 04 June 2009 © Twiflex 2001.

Twiflex Limited

DS2006

MRH Disc Brake Caliper - Mechanically Applied, Lever Operated

Nominal dimensions are given

For caliper dimensions see DS2000

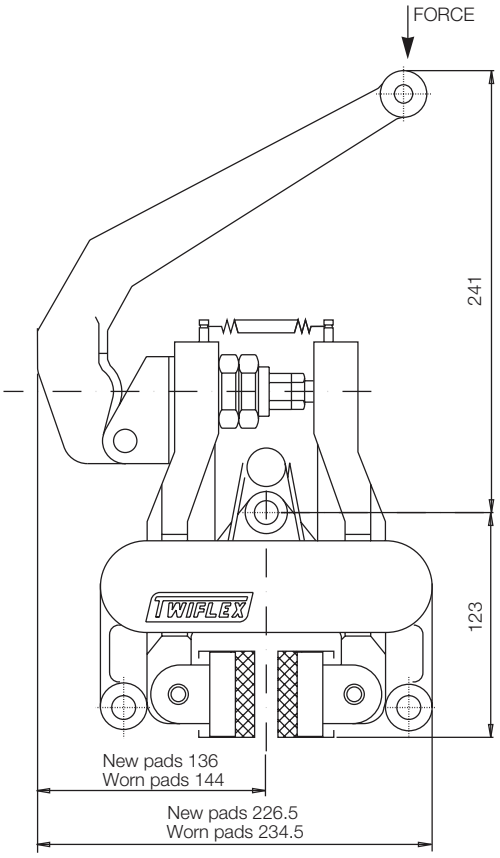

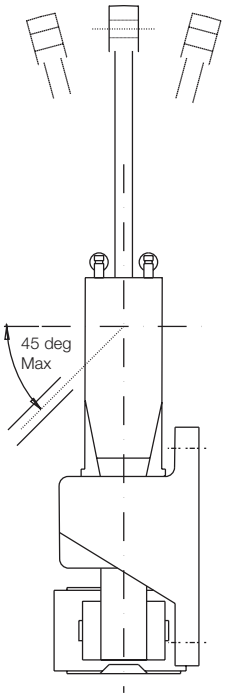

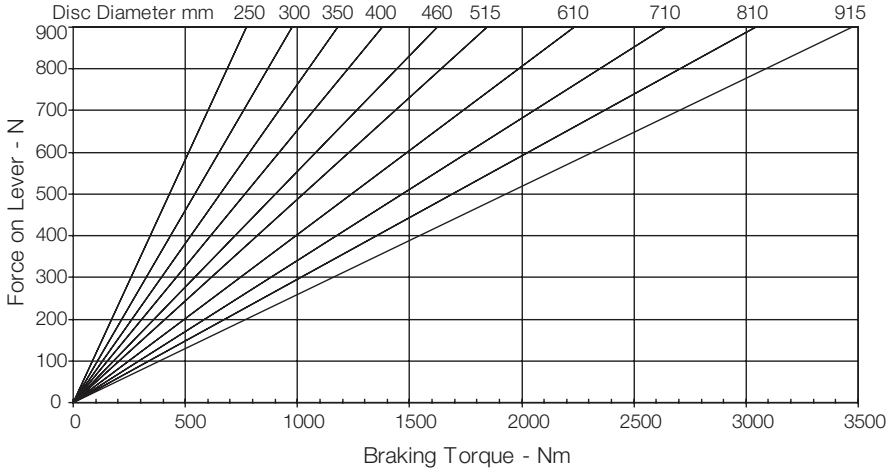

Weight (caliper and lever) - 7.9kg
(lever only) - 1.4kg

Maximum force on lever 0.9kN

Maximum Braking Force = 8.4kN @ 0.9kN force on lever

The ratings shown on the above graph are based on fully bedded and conditioned brake pads with nominal friction coefficient μ=0.4.

For bedding-in and conditioning procedures see Publication M1060.

Braking Force is defined as the Tangential Force acting on the brake disc at the Effective Disc Radius.

Braking Torque (Nm) = Braking Force (N) x Effective Disc Radius (m) where Effective Disc Radius = Actual Disc Radius - 0.03.

Twiflex Disc Brakes must be used with Twiflex asbestos free brake pads. The use of any other brake pads will invalidate the warranty. Twiflex Limted reserves the right to modify or change the design without prior notice.

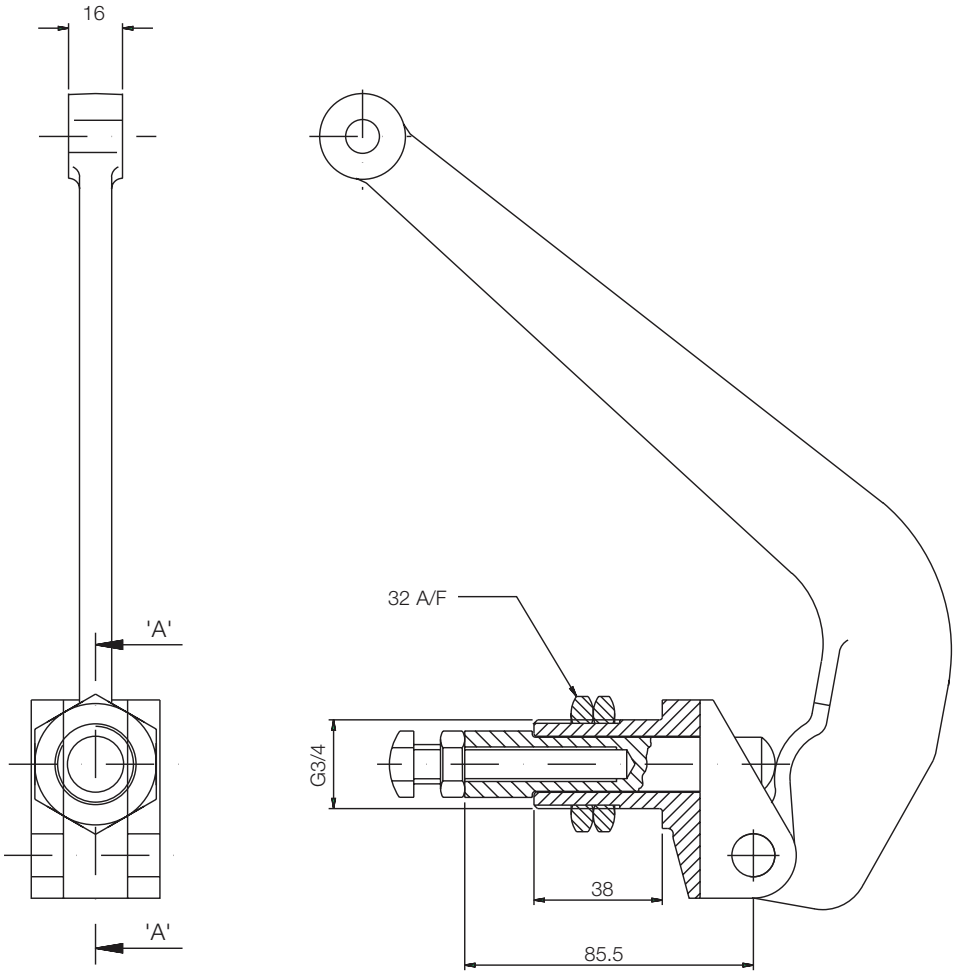

Section 'A' - 'A'

Lever Assembly Part Number 7800125

Lever Fitment

1. Offer lever to caliper making sure that both lock nuts are removed before placing push rod through caliper arm.

2. Fit lock nuts over the push rod and locate it's end within the slot of the other arm.

3. Tighten one lock nut to 50-60 Nm then tighten the second nut against the first.

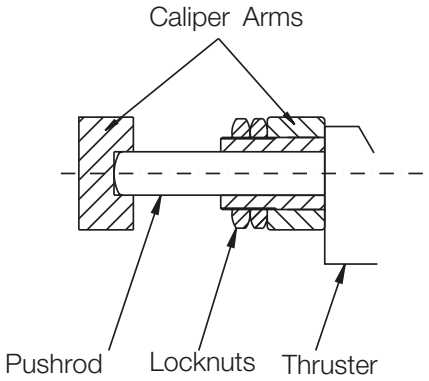

Twiflex® Limited
An Altra Industrial Motion Company

www.twiflex.com

9 Briar Road, Twickenham
Middlesex TW2 6RB - England
+44 (0) 20 8894 1161
Fax: +44 (0) 20 8755 5601

This approval is in Accordance with Certificate number 850822
Issue 04 June 2009 © Twiflex 2001.

Twiflex Limited

DS2009

MRW Disc Brake Caliper - Mechanically Applied, Hand Operated

Nominal dimensions are given

For caliper dimensions see DS2000

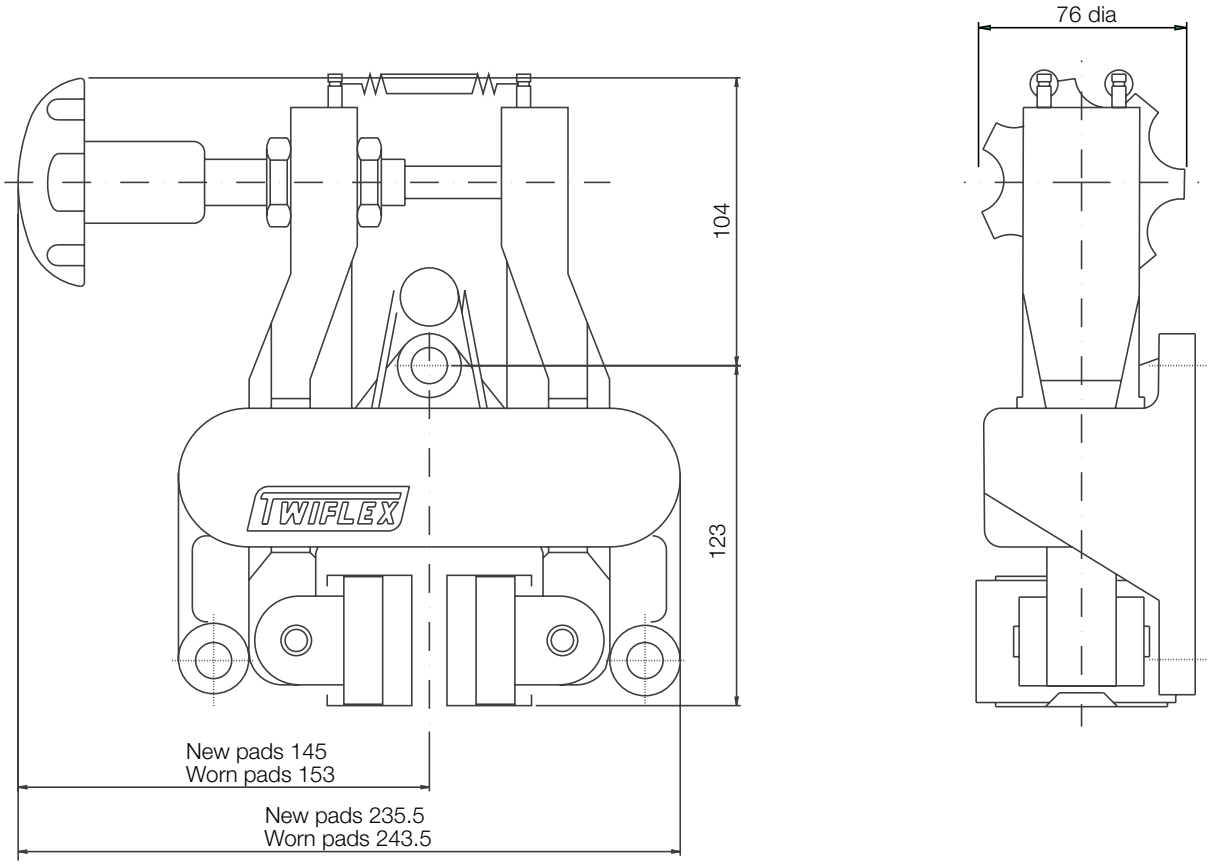

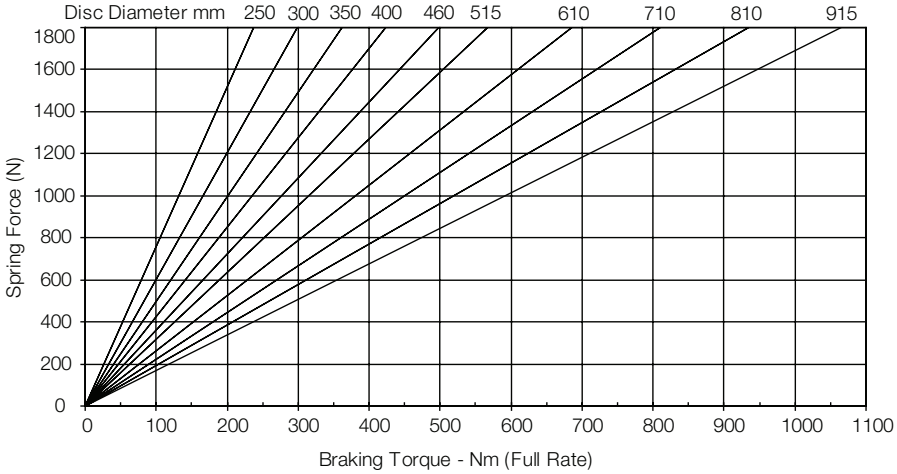

Weight (caliper and hand knob) - 7.8kg
(hand knob only) - 1.3kg

1 turn of hand knob = 150N braking force

Maximum Braking Force = 2.68kN

The ratings shown on the above graph are based on fully bedded and conditioned brake pads with nominal friction coefficient μ=0.4.

For bedding-in and conditioning procedures see Publication M1060.

Braking Force is defined as the Tangential Force acting on the brake disc at the Effective Disc Radius.

Braking Torque (Nm) = Braking Force (N) x Effective Disc Radius (m) where Effective Disc Radius = Actual Disc Radius - 0.03.

Twiflex Disc Brakes must be used with Twiflex asbestos free brake pads. The use of any other brake pads will invalidate the warranty. Twiflex Limted reserves the right to modify or change the design without prior notice.

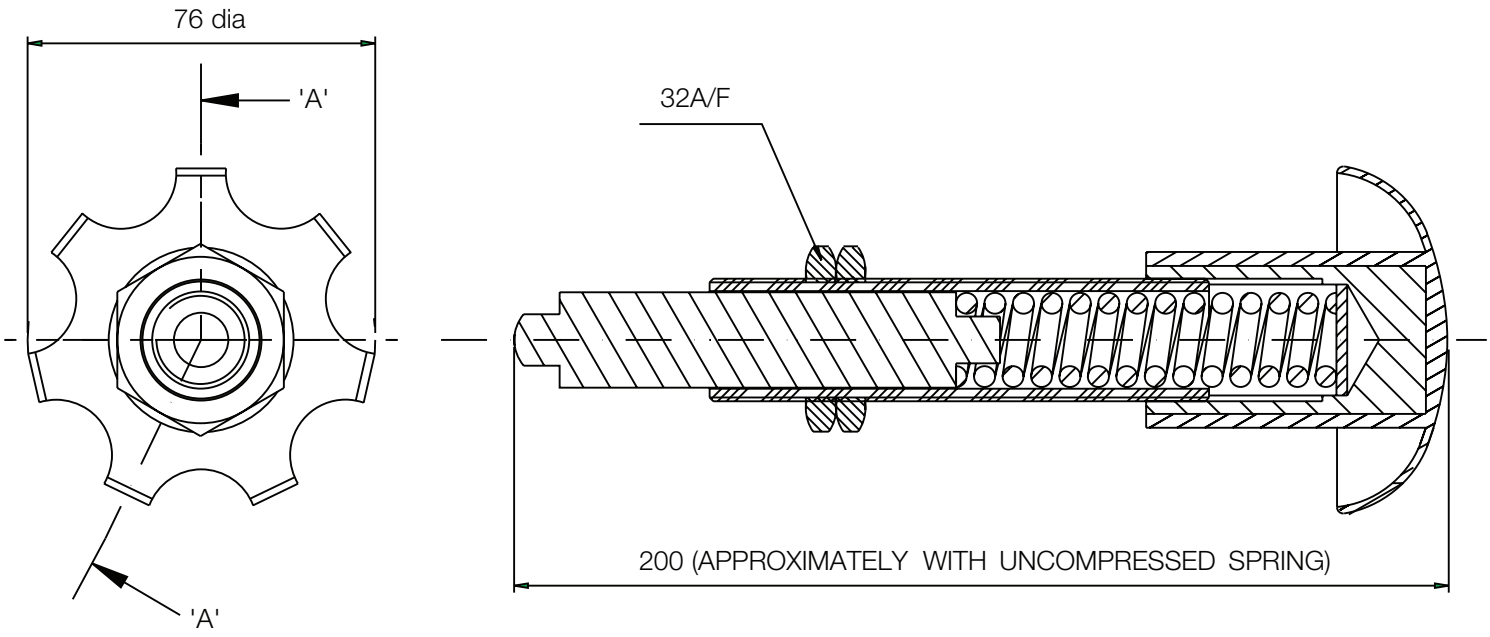

Hand Knob Assembly Part Number 7800126

Thruster Fitment

1. Offer hand knob assembly to caliper making sure that one lock nut is removed before placing push rod through caliper arm.

2. Fit a lock nut over the push rod and locate the push rod within the slot of the opposite arm.

3. Adjust the lock nuts unti lthe push rod contacts the opposite arm.

4. Tighten the lock nuts to 50-60Nm.

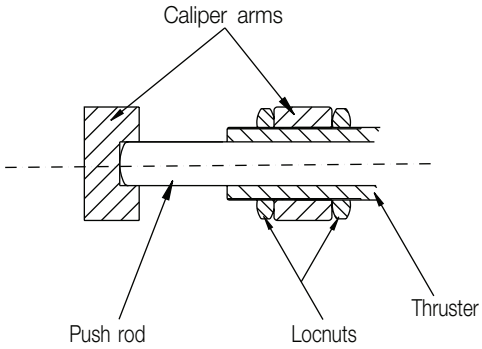

Twiflex® Limited
An Altra Industrial Motion Company

www.twiflex.com

9 Briar Road, Twickenham
Middlesex TW2 6RB - England
+44 (0) 20 8894 1161
Fax: +44 (0) 20 8755 5601

This approval is in Accordance with Certificate number 850822
Issue 04 June 2009 © Twiflex 2001.